ANGULAR BIDIRECTIONAL DETONATION & DEFLAGRATION FLAME ARRESTER

Typ: DAG-A7R-B-IIB-050

Certificate: IBExU13ATE2036 X EN ISO 16852

PIPE CONNECTION		
FLANGED CONNECTION	*DN 50 - DIN 2631 - PN6**	
* According to the customers' request DIN 2632 PN10 or DIN 2633 PN16		
MATERIAL OF CASING, CONNECTING FLANGES AND CONNECTION MATERIAL		
ČSN 11 373	*DIN 1.0036*	*S235JRG1*
ČSN 17 240	*DIN 1.4301*	*X5CrNi18-10*
ČSN 17 348	*DIN 1.4571*	*X6CrNiMoTi17-12-2*

MATERIAL QUENCHING ELEMENT	*DIN 1.4571* - X6CrNiMoTi17-12-2
SEALING	*CS1310 th. 2 mm (expanded graphite)*
CORROSION PROTECTION	*Zink, Komaxit RAL 2004*
ARRESTER WEIGHT	*ca. 19,5 kg*
MAXIMUM OPERATING PRESSURE	*1,1 bar*
OPERATING TEMPERATURE RANGE	*-20 °C... +60 °C*
NAMEPLATE	*stainless metal sheet*
EXPLOSION CLASS	***IIB***

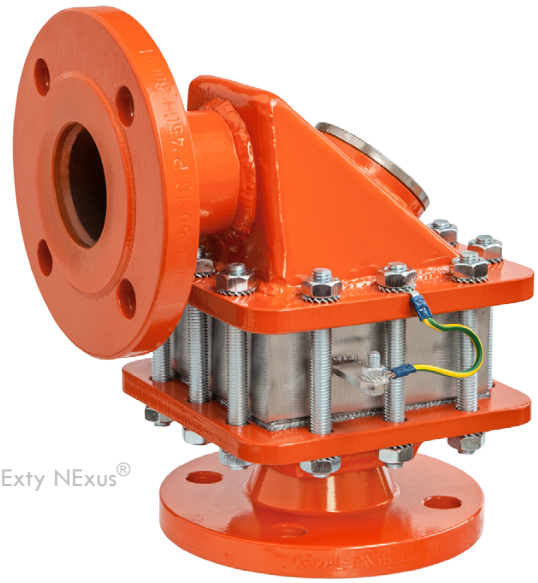

FLAME ARRESTER´S PRESSURE DROP

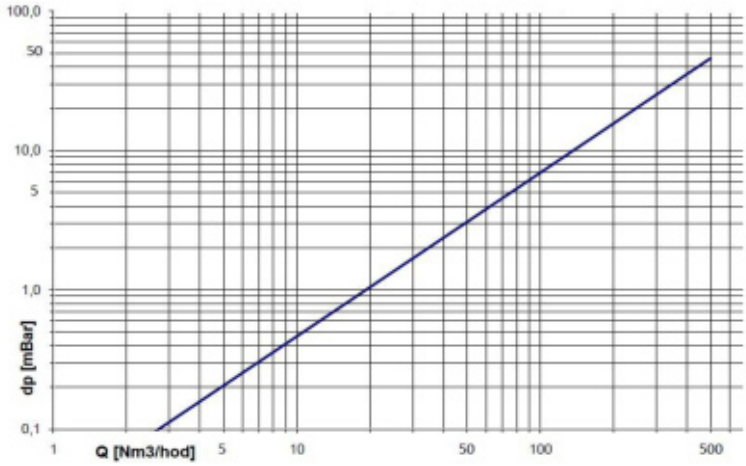

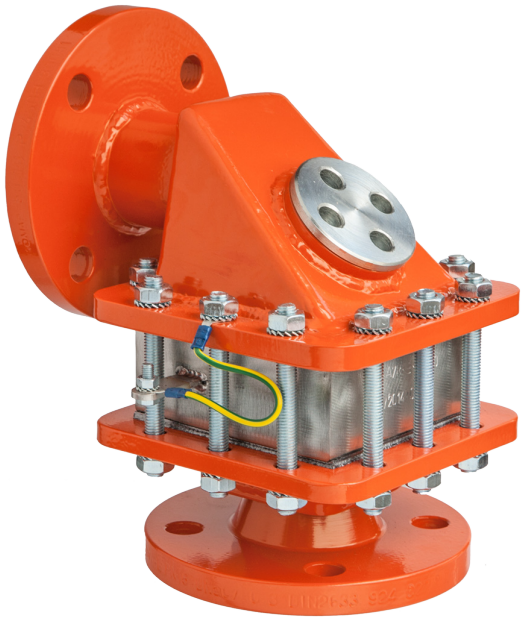

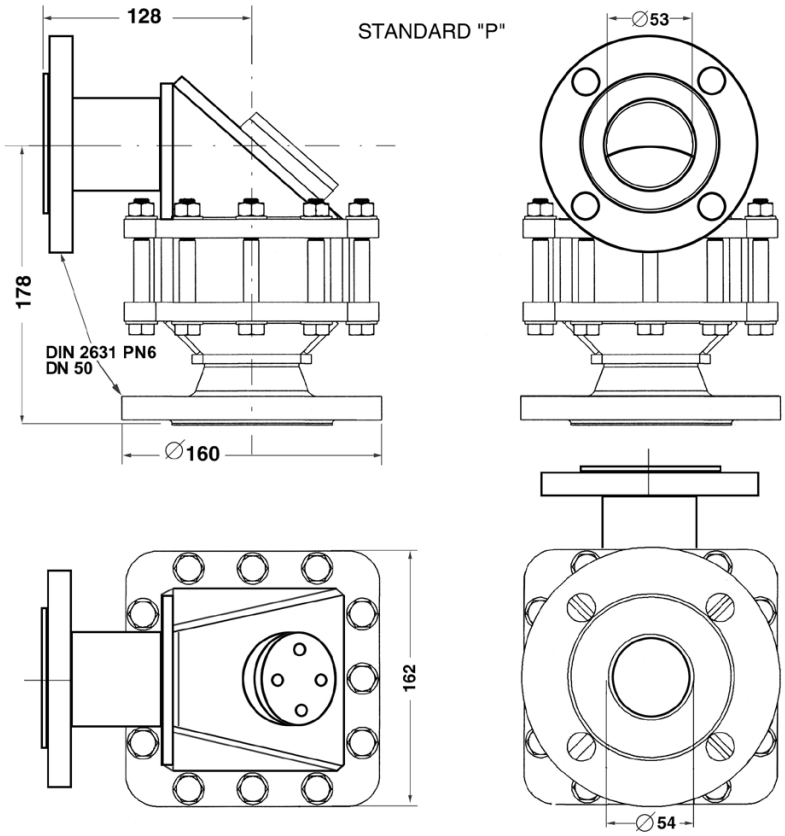

Technické změny vyhrazeny
Technische Änderungen vorbehalten
Specifications subject to change without notice

© copyright all rights by DAG-TS