END-OF-LINE DEFLAGRATION FLAME ARRESTER

Typ: DAG-A7K-C-IIA-100

Certificate: IBExU10ATEX2171 X EN ISO 16852

PIPE CONNECTION		
FLANGED CONNECTION	*DN 100 - DIN 2633 - PN16**	
* According to the customers' request DIN 2631 PN6 or DIN 2632 PN10		
THREAD CONNECTION	*DN 100 - 4"*	
MATERIAL OF CASING, CONNECTING FLANGES AND CONNECTION MATERIAL		
ČSN 11 373	*DIN 1.0036*	*S235JRG1*
ČSN 17 240	*DIN 1.4301*	*X5CrNi18-10*
ČSN 17 348	*DIN 1.4571*	*X6CrNiMoTi17-12-2*

MATERIAL QUENCHING ELEMENT	*DIN 1.4571* - X6CrNiMoTi17-12-2
SEALING	*CS1310 th. 2 mm (expanded graphite)*
CORROSION PROTECTION	*Zink, Komaxit RAL 2004*
ARRESTER WEIGHT	*ca. 22 kg*
OPERATING TEMPERATURE RANGE	*-20 °C... +60 °C*
NAMEPLATE	*stainless metal sheet*

EXPLOSION CLASS	***IIA***

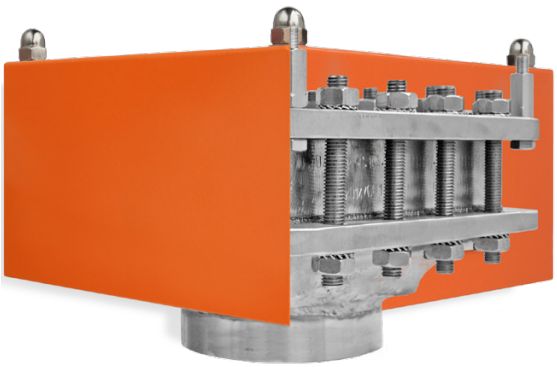

SafExty NExus®

FLAME ARRESTER´S PRESSURE DROP

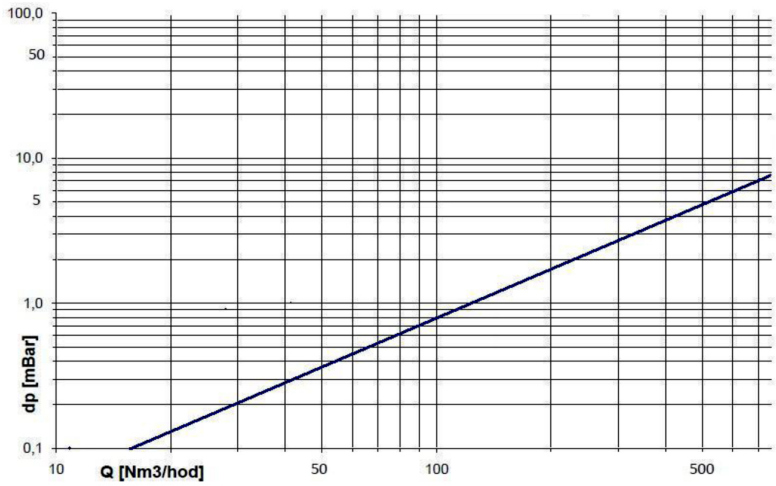

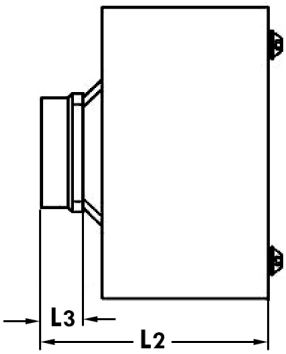

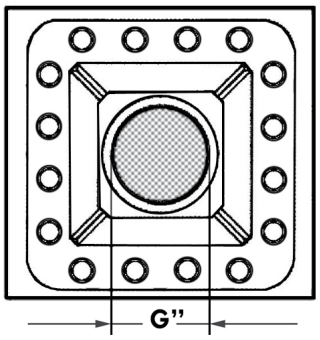

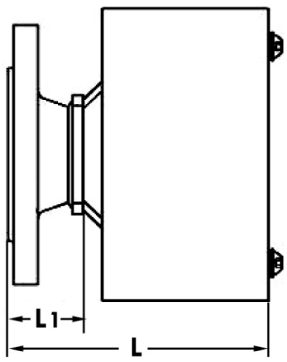

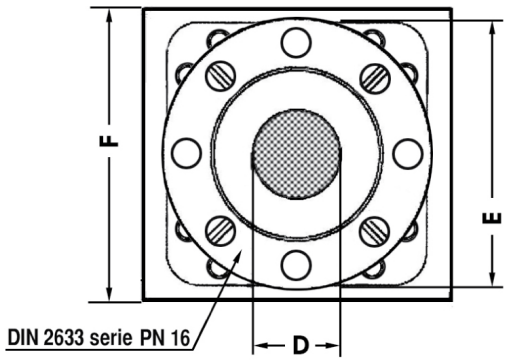

ROZMĚRY - ABMESSUNGEN DIMENSIONS		
D	DN	100
E	[mm]	290
F	[mm]	331
L	[mm]	204
L1	[mm]	52
L2	[mm]	182
L3	[mm]	30
G"	[inch]	4"
FL	DIN 2633	PN16

Technické změny vyhrazeny -
Technische Änderungen vorbehalten -
Specifications subject to change without notice

© copyright all rights by DAG-TS